Lab 3 Report

Name: Tyler W. Grindrod

PID: 5695162 Date: 02/14/26

1. Create a comparator circuit on TinkerCAD (20%)

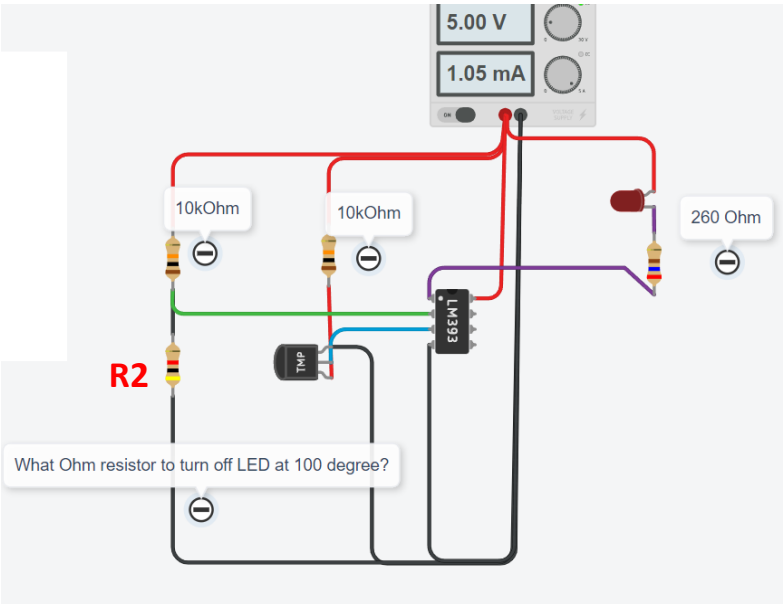

   a. Calculate R2 value that would make LED to turn off at 100 degree. (Show the process and equation)
   b. You should have this circuit on TinkerCAD for submission

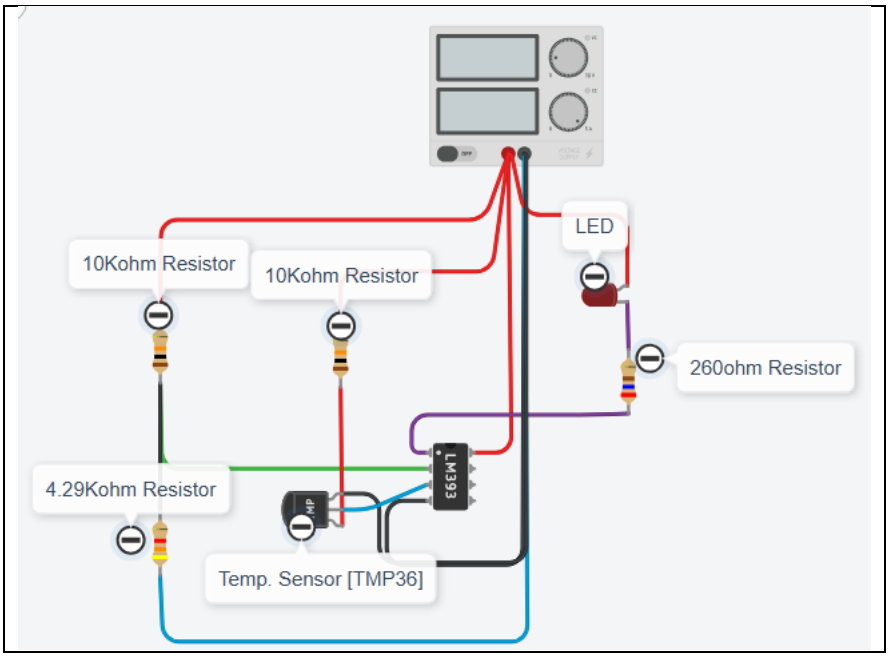

Lab 3 Report
Name: Tyler W. Grindrod
PID: 5695162 Date: 02/14/26

2. Create an Inductor circuit (20%)

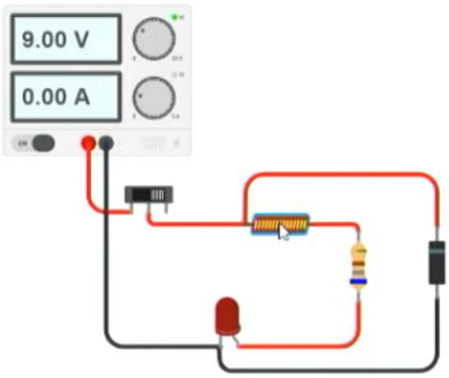

a. What should be the inductance (mH) with 1kOhm resistor to make time constant 5 second? (Show the process and equation)

$$i(t) = I_{max}(1 - e^{i\frac{t}{\tau}})$$
$$I_{max} = \frac{V}{R}$$

t = 0:
I(t0) = 0mA
t = 5s
i(t5) = 5.68 mA
t = 10s
i(t10) = 7.79 mA
t=15s
i(t15) = 8.55mA

b. Calculate the circuit current at t = 0 s, 5 s, 10 s, and 15 s time constants after the switch is closed. In one sentence, explain your understanding of the function of an inductor over time in this circuit.

Over time the inductor starts as an open circuit (0mA) and starts to behave like a short circuit as current stabilizes.

c. Explain the function of the switch and Diode in this circuit and what would happen if each of them was removed?

The Diode dissipates the magnetic field from the inductor when the switch opens. If the Diode were removed we would witness a steep spike in voltage that could damage components.

d. You should have this circuit on TinkerCAD for submission

Lab 3 Report
Name: Tyler W. Grindrod
PID: 5695162 Date: 02/14/26

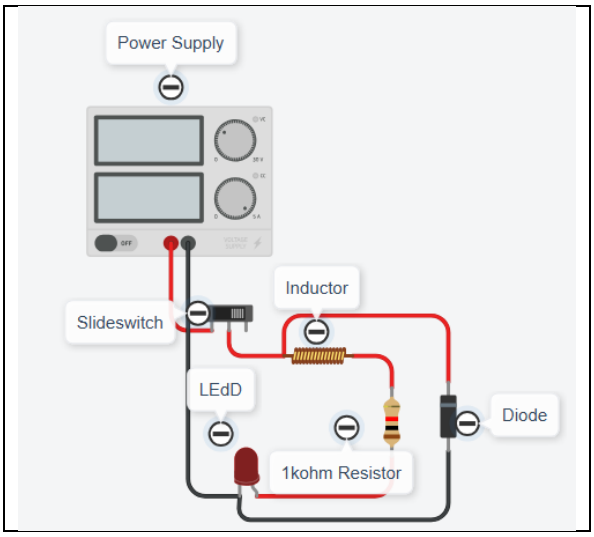

3. Develop an op-amp circuit
   a. Addition (30%)
      i. **Op-amp is driven by +/- 30V.** What will be the output voltage of the adder circuit when In1 = 5V and In2 = 10V sinusoidal signal when
         1. R1 = R2 = RF = 10 kohms
         2. R1 = R2 = 10 kohms, RF = 15 kohms
         3. R1 = R2 = 10 kohms, RF = 25 kohms

<u>Insert your calculations. Fill the table and compare the results using the formula and Tinkercad.</u>

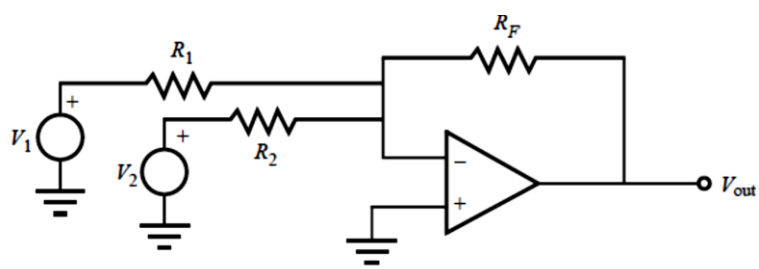

$$V_0 = R_f\left(\frac{V_1}{R_1} + \frac{V_2}{R_2}\right)$$

- If $R = R_1 = R_2 = R_F$

$$V_o = -(V_1 + V_2)$$

Lab 3 Report

Name: Tyler W. Grindrod

PID: 5695162 Date: 02/14/26

RF	Output Equation	Theoretical Min/Max	Tinkercad Min/Max	Clipping (No/Yes) Neg/Pos side
10	-(5+10)	-15 V	-15 V	No
15	-1.5*(5+10)	-22.5 V	-22.5 V	No
25	-2.5*(5+10)	-37.5 V	-30 V	Yes (Neg)

10 KΩ

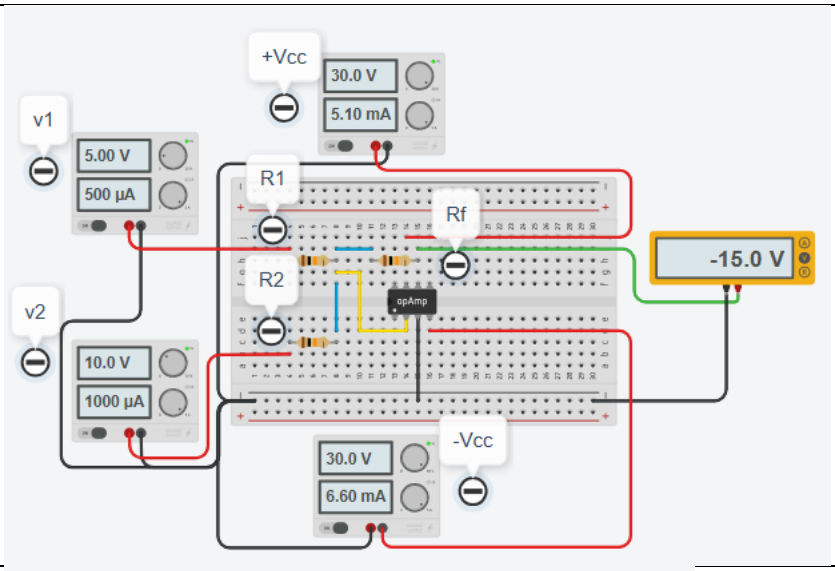

15 KΩ

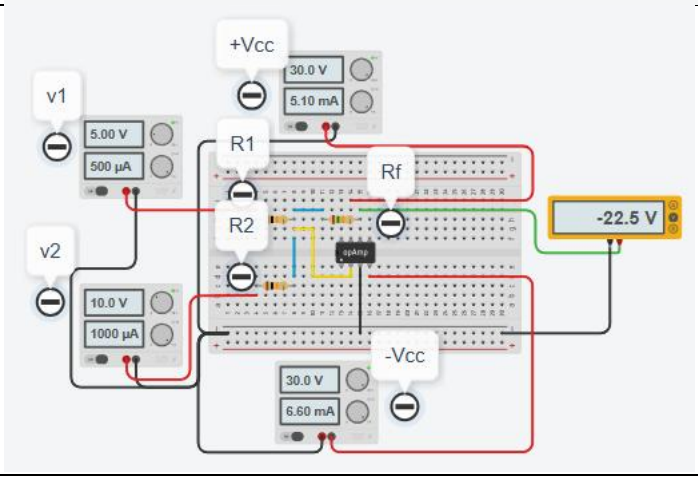

Lab 3 Report

Name: Tyler W. Grindrod

PID: 5695162 Date: 02/14/26

25 KΩ	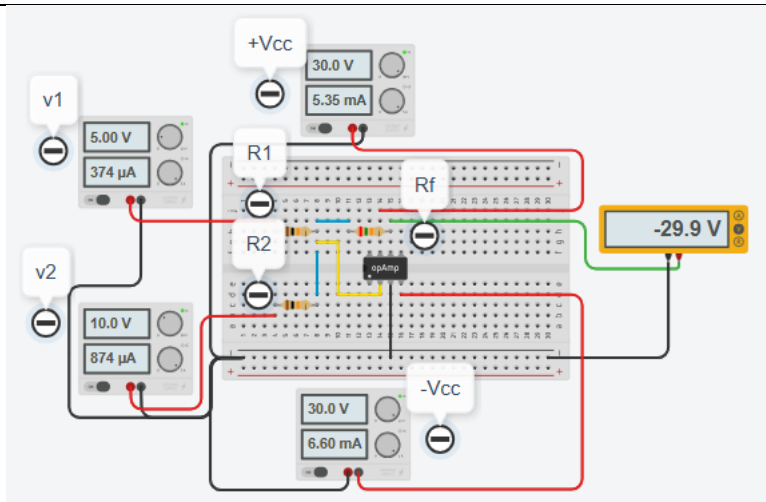

b. Subtraction (30%)

i. **Op-amp is driven by +/- 30V.** What will be the output voltage of the differential amplifier when In1=5V and In2=10V sinusoidal signal when

1. R1 = R2 = RF= 10 kohms
2. R1 = R2 = 10 kohms, RF = 25k ohms
3. Determine the maximum value of R_F for which the op-amp output remains within the positive supply rail (i.e., no positive-side clipping)

<u>Insert your calculations. Fill the table and compare the results using the formula and Tinkercad.</u>

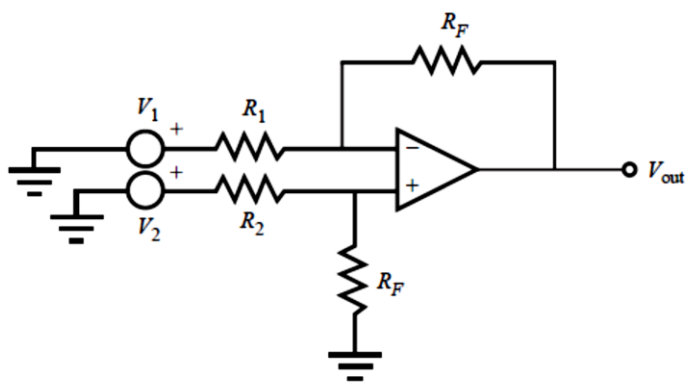

- If $R = R_1 = R_2$

$$V_{out} = \frac{R_F}{R}(V_2 - V_1)$$

RF	Output Equation	Theoretical Min/Max	Tinkercad Min/Max	Clipping (No/Yes) Neg/Pos side
10	1 * (10-5)	5 V	5 V	NO
25	2.5 * (10-5)	12.5 V	12.5 V	NO
Max RF	60kΩ	30 V	30 V	NO

Lab 3 Report
Name: Tyler W. Grindrod
PID: 5695162 Date: 02/14/26

10 KΩ	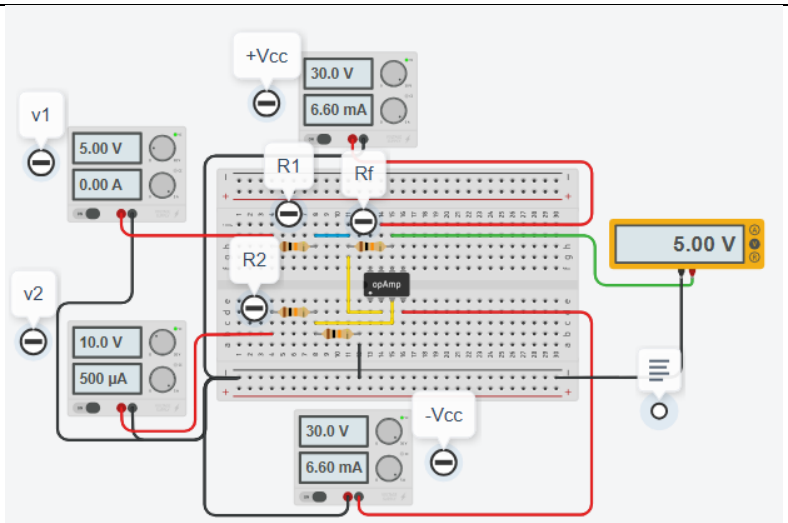
15 KΩ	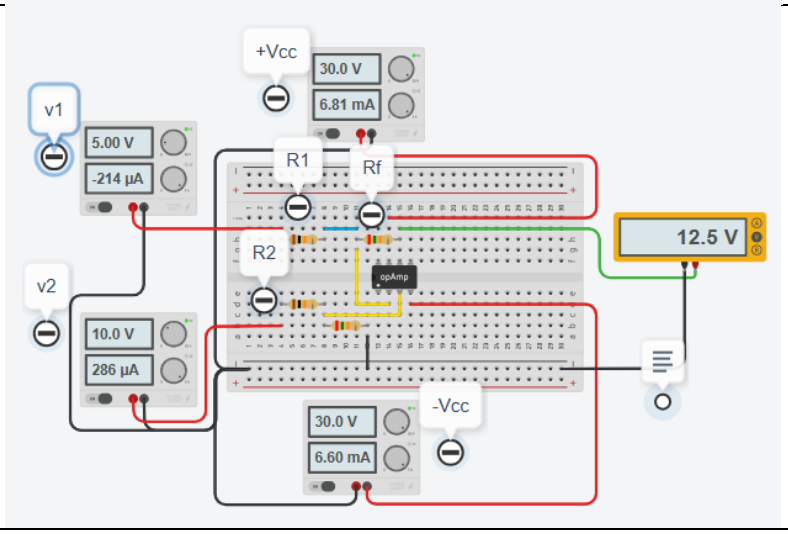

Lab 3 Report

Name: Tyler W. Grindrod

PID: 5695162 Date: 02/14/26

maxRF KΩ	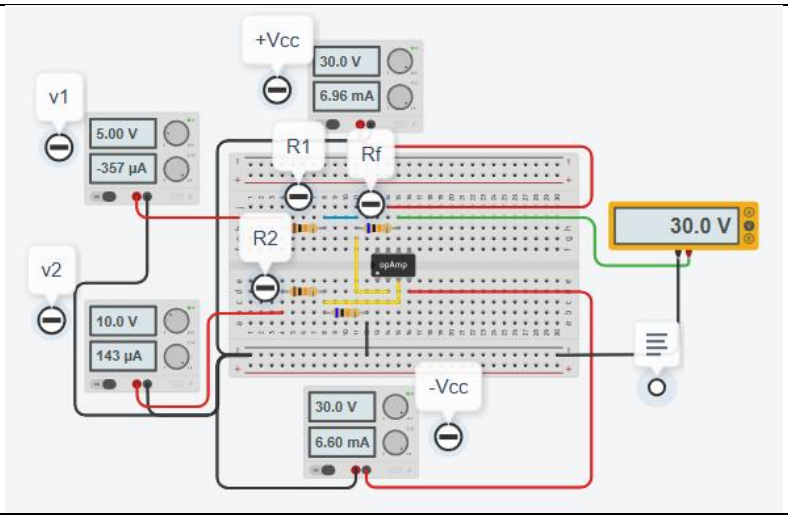

Lab 3 Report
Name: Tyler W. Grindrod
PID: 5695162 Date: 02/14/26

TinkerCad Link

https://www.tinkercad.com/things/3pIT7zE8izT-lab3/editel?returnTo=https%3A%2F%2Fwww.tinkercad.com%2Fdashboard%2Fdesigns%2Fcircuits&sharecode=Ng7uSgi3bW6zNBbpckOPGm0xddNo-MY_saK6v8q4XhA